# FAR

## Circular Amp Chart Recorder

### AMP CHART RECORDER

*Circular Chart Recorder products serves industrial market requirements for high quality data acquisition and monitoring products and systems.*

- *Highly Precise sealed potentiometer as a feedback element.*
- *Highly precise & Accurate Stepper motor.*
- *Calibration through 2 potentiometers.*
- *Simple Interface*
- *IP 65*

Specifically designed for alternant current. In case customer provides external transmitter adapted to FAR input signal, other variable processes could be registered.

### FAR

CE

| Model | Code |
|---|---|
| FAR 115-60A05 | 41725 |

### CIRCULAR CHART REGISTRY

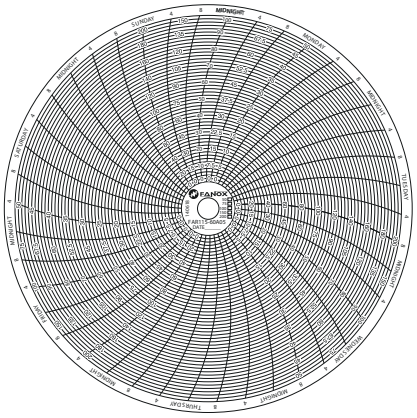

| CHARACTERISTICS | |
|---|---|
| Power Supply | 110 VAC - 50 / 60 Hz |
| Accuracy | 1.5 % F.S. |
| Input Signal Range | 0-5 Aac Current |
| Chart Speed | Selectable 24 HRS/REV or 168 HRS/REV |
| Chart Speed Variation | ±2% 50/60 Hz |
| Operating Conditions | 0 to 50 ºC & 0 to 80% RH |
| Disposable Fiber tip Pen | Red/Green |
| Mounting | Wall / Panel mountable Encloser |

### ACCESORIES

| | |
|---|---|
| Charts | 50 for each recorder |
| Pens | 5 for each recorder |

### DESIGN

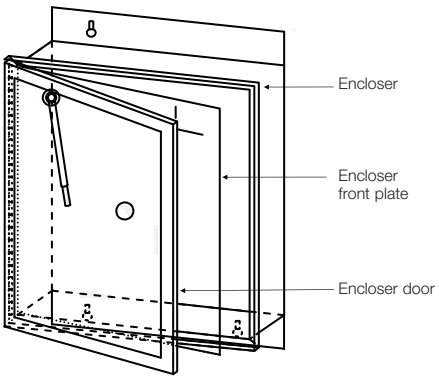


### DIMENSIONS and CUTOUT (mm)

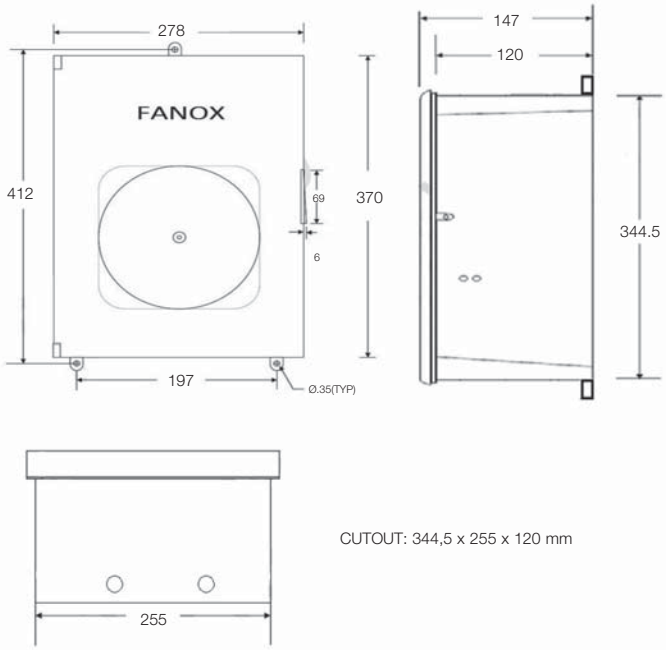


CUTOUT: 344,5 x 255 x 120 mm